ResearchGate

See discussions, stats, and author profiles for this publication at: https://www.researchgate.net/publication/261298905

An energy saving, factory-validated disturbance decoupling control design for extrusion processes

Conference Paper · July 2012

DOI: 10.1109/WCICA.2012.6358364

CITATIONS
67

READS
283

2 authors, including:

Zhiqiang Gao
Cleveland State University

170 PUBLICATIONS **6,628** CITATIONS

SEE PROFILE

Some of the authors of this publication are also working on these related projects:

Project Engineering Cybernetics: a renewal View project

Project ADRC: Problem Solving View project

All content following this page was uploaded by Zhiqiang Gao on 15 January 2015.

The user has requested enhancement of the downloaded file.

An Energy Saving, Factory-Validated Disturbance Decoupling Control Design for Extrusion Processes

Qing Zheng[1], *Senior Member, IEEE*, and Zhiqiang Gao[2], *Member, IEEE*

Abstract—**This paper is focused on the design and factory testing of a disturbance decoupling control (DDC) approach for hose extrusion processes. A unique dynamic DDC strategy, based on the active disturbance rejection control (ADRC) framework, is designed and implemented as programmable logic control (PLC) code to regulate the volumetric flow in a polymer single-screw extruder. The flow regulation is achieved by controlling the temperature and the pressure at the die. With the DDC method, it is shown that a largely unknown square multivariable system is readily decoupled by actively estimating and rejecting the effects of both the internal plant dynamics and external disturbances. The proposed DDC approach requires very little information on plant model and has the inherent disturbance rejection ability, and it proves to be a great fit for the highly nonlinear and multivariable extrusion processes. Recently, the DDC design strategy has been put under rigorous test at Parker Hannifin Parflex hose extrusion plant, a facility considered to be a world class operation. In a test run across multiple production lines for over eight months, the product performance capability index (Cpk) was improved by 30 percent and energy consumption is reduced over 50 percent. The production line data fully support the assertion that ADRC is a transformative control technology with great potentials in streamline factory operations, saving energy and improving quality, all at the same time.**

Key Words: Disturbance decoupling control, energy savings, extrusion processes.

I. Introduction

Hose extruders are one of the critical equipments for polymer processing industries. As there is an increasing need for products produced by polymer extrusion, more and more efforts have been put on increasing polymer production and improving product quality. Due to the complex dynamics of the extrusion processes for polymer products, there have been various schemes proposed for modeling and controlling extruders to improve the control performance and the product quality [1-17].

There are two basic types of plastics extruder: the single screw extruder and the twin screw extruder. This paper is focused on the single screw plasticating extruder. However, the techniques discussed in this paper are equally suitable for the twin screw cases. A typical polymer extrusion setup is shown in Fig. 1 [18]. The single screw continuous configuration consists of a hopper to hold the polymer resin, barrel through which the resin is passed towards the die, and motor driven screw which compresses and homogenizes the resin as it passes through the barrel. The resin is melted/cooled along the barrel by heaters/fans. The Barrel is typically grouped into heating zones so that the polymer resin is gradually melted as it is moved toward the die by the motor driven screw. The heat is supplied by external barrel heating and internal friction forces due to pressure and the rotation of the screw [13].

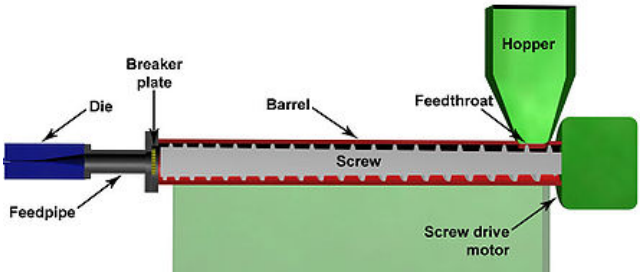

Fig. 1 Cut-away view of extrusion setup [18].

High-quality extrusion is essentially characterized by a precisely-regulated output volumetric flow. This can be achieved by finely regulating the temperature and the pressure of the die at the outputs of the extruder [14]. Temperature of the extrudate is of chief importance as it is one of the vital characteristics of the system that impacts quality of the final product. The rheology and stability of the resin as it is heated and passes through the barrel (melt) are directly tied to the temperature, thus the control of this temperature has been identified as a primary control mechanism in affecting quality control of an extrudate [15]. The dynamics of the system dictates that as the temperature fluctuates so does the pressure within the barrel. The pressure within the barrel exerted on the extrudate has also been shown to have a significant effect on the rheology and stability of the extrudate as well and thus has also been identified as a vital control objective [4] as well.

Conventionally, the regulation of the output temperature and pressure is obtained by open-loop tuning of the rotating-screw speed and the electric heater set-points; this is usually done by an expert human operator [10]. The inadequacy of such method is obvious, leading researchers to investigate various approaches of system identification and control for extruders as reported in [1, 2, 5, 6, 8, 9, 11, 12, 14]. The theoretical model that was derived from the physical relationship between variables benefits the understanding of the extrusion process, but is usually complex or sometimes impossible, in a cost-effective manner, to be obtained in a given extrusion process [7]. In addition, due to uncertainties

[1]Department of Electrical and Computer Engineering, Gannon University, Erie, PA 16541, USA. E-mail: zheng003@gannon.edu.
[2] Center for Advanced Control Technologies, Cleveland State University, Cleveland, OH 44115, USA. E-mail: z.gao@csuohio.edu.

in feed properties and disturbances in the plant or processing environment, the extrusion process can easily falls in instabilities if the control is designed solely based on a model. With variations in polymeric materials in commercial production and their significantly different properties, it is very challenging to build up a generic mathematical model of the process for the purpose of temperature and pressure regulation, to meet the stringent quality requirements. The uncertainty in the effect of operating conditions on the extrudate quality presents a major problem to producers to achieve the desired product quality. Furthermore, it is difficult to identify and respond appropriately to process disturbances occurring during a production run, often resulting in off-specification product and further downtime [12].

From the above analysis, it can be concluded that a control approach, suitable for multivariable systems with great disturbance rejection ability and strong robustness, is urgently needed for hose extrusion processes. In this paper, a recently proposed dynamic disturbance decoupling control (DDC) approach [19] is applied to polymer extrusion processes. Unlike many existing decoupling methods, the new method requires very little information of the plant dynamics. This decoupling control method is rooted in a new ground-breaking paradigm of control design: active disturbance rejection control (ADRC). The original concept of active disturbance rejection was proposed with the nonlinear structure by Han [20-22] and was further simplified and parameterized in [23], opening the door to large scale practical applications. The new parameterization and tuning method greatly ease the implementation of ADRC and make the design transparent to practicing engineers [24, 25]. More importantly, with the proposed parameterization of ADRC, it becomes a viable candidate for decoupling control.

ADRC is a quite different design philosophy. At its foundation is the recognition that, in the real world, dynamic systems are often highly uncertain, both in terms of the internal dynamics and external disturbances. The magnitude of the uncertainties could make them well beyond the reach of prevailing robust control theories. ADRC offers a solution where the essential information needed for the feedback control system to function well is obtained, not from a mathematical model, but through the input-output data of the plant in real time. Consequently, the control system can react promptly to the changes either in the internal dynamics of the plant, or its external disturbances. As first shown in [26] for aircraft flight control and then in [19] for the chemical processes, ADRC is a natural solution to decoupling control problems in the presence of large uncertainties. Compared to these systems, hose extrusion processes are even more nonlinear and uncertain, with disturbances abound. The challenge is to demonstrate that the dynamic DDC approach can be just effective and practical to use, which leads to this paper.

With little modeling information assumed, namely the predetermined input-output paring, the decoupling problem is reformulated as that of disturbance rejection, where the cross channel interference is treated as disturbance. That is, the effect of one input to all other outputs that it is not paired with is viewed as a disturbance to be rejected. In the ADRC framework, such disturbance is actively estimated using the extended state observer (ESO) and canceled in the control law, in the absence of an accurate mathematical model of the plant, leading to roughly a set of single-input and single-output plants and a much easier design problem.

The paper is organized as follows. The hose extrusion control problem is reformulated as a disturbance decoupling control problem in Section II. The dynamic DDC approach is presented in Section III. The production line data are demonstrated in Section IV. Finally, some concluding remarks are given in Section V.

II. Problem Formulation

Polymer extrusion is known as a complex multivariable nonlinear system. Polymer rheology and stability are directly related to temperature and pressure. Within the system, increasing the temperature of the melt at a constant pressure results in a lower viscosity of the melt which in turn impedes the flow of the melt within the barrel. Overheating within the barrel can cause unwanted changes in material properties and have possible safety implications. The pressure inside the barrel coupled with friction results in heating contributions to the melt, directly increasing temperature as the pressure builds. The pressure in the system is also coupled with other channels within the process notably with extrudate thickness and speed of the motor driven screw.

Figure 2 shows a multivariable extrusion process block diagram. The screw speed and die flow restriction offer the potential for controlling rapid dynamic changes. Barrel temperature or screw temperature profiles change very slowly because of the long time constants associated with the massive barrel and screw and their respective heaters. These therefore have potential for steady state control only [1].

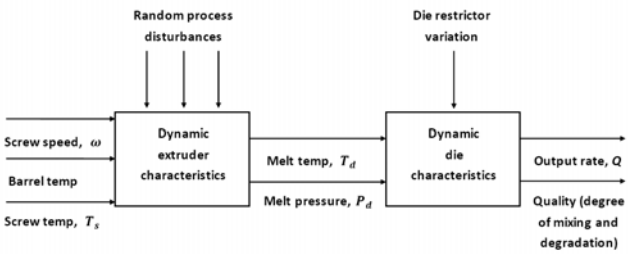

Fig. 2 Multivariable extrusion process block diagram [1].

Fig. 3 shows the layout of a single screw extruder [10]. The input variables include: engine command v and on-off heater relay commands $d_1 - d_7$; the output variables include: heaters temperature sensors $T_1 - T_7$, output temperature sensor T_{out}, and output pressure sensor P_{out}. The interactions/disturbances among different heater zones are the main issue for temperature control in the single screw extruder.

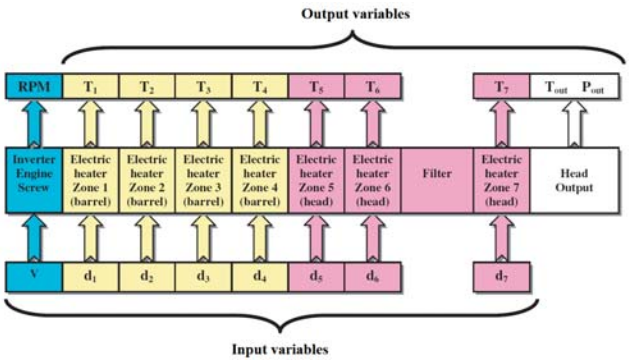

Fig. 3 The layout of a single screw extruder [10].

Employment of independent PID controllers to regulate temperature within a zone of the barrel to gradually melt the resin as the screw mixes and propels it toward the die has been the method utilized historically. This method cannot ensure quality as the PID controllers must be tuned through a trial and error process, and slight disturbances to the system can throw off the tuned gains resulting in unpredictable quality of the extrudate. These PID controllers operate under the assumption of constant pressure and the control law is predicated on the temperature feedback of the heating zone of interest. The utilization of independent PID controllers adds to the complexity of the systems as each PID must be tuned individually and changes in one zone may cause a cascading effect across the system as a whole. This has led to the need for an alternative control method as the complexity of systems grows and quality demands become more stringent.

III. A Dynamic Disturbance Decoupling Control Method

ADRC is a relatively new control design concept and a natural fit for the purpose of disturbance decoupling in extrusion. This is because, in extrusion, each temperature zone is assigned a sensor (thermal couple) and actuator (heater, and sometimes a cooling fan as well). The temperature control for each zone is not a hard problem but putting them together, physically clustered closely, makes it very challenging to control the temperature independently. Each zone is strongly coupled with its neighbors and it is no wonder separately tuned PID controllers have a difficult time to deal with such couplings. On the other hand, model-based multivariable control approach to this problem can be very effective, in laboratory studies, once a good mathematical model is developed, often after months of efforts. But each extrusion line is unique and establishing model for it could be prohibitive task, and this brings us to ADRC.

ADRC is a drastic departure from both the PID and the model-based multivariable control paradigms. As it's applied to extrusion, the idea is that the couplings among various zones are estimated and cancelled in real time, reducing the complicated multivariable control problem to a set of independent temperature control loops. Such materialization of ADRC in multivariable control setting is denoted as dynamic DDC, and it not limited to the single screw extruders discussed in this paper.

Without loss of generality, a general DDC approach for an nth order system is presented below, as shown in Fig. 4.

Let

$$\begin{aligned}
\vartheta_1 &= \left[y_1^{(n_1-1)}(t), y_1^{(n_1-2)}(t), \cdots, y_1(t) \right], \\
\vartheta_2 &= \left[y_2^{(n_2-1)}(t), y_2^{(n_2-2)}(t), \cdots, y_2(t) \right], \\
&\vdots \\
\vartheta_m &= \left[y_m^{(n_m-1)}(t), y_m^{(n_m-2)}(t), \cdots, y_m(t) \right], \\
u &= \left[u_1(t), u_2(t), \cdots, u_m(t) \right].
\end{aligned} \tag{3.1}$$

Consider a system formed by a set of coupled input-output equations with predetermined input-output parings

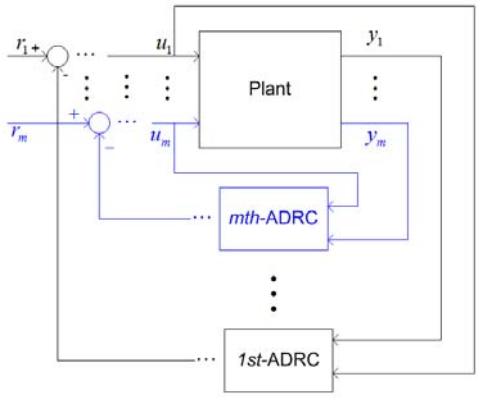

Fig. 4 The design scheme for the DDC approach.

$$\begin{cases}
y_1^{(n_1)} = p_1(\vartheta_1, \vartheta_2, \cdots, \vartheta_m, u, w_1) + b_{11}u_1 \\
y_2^{(n_2)} = p_2(\vartheta_1, \vartheta_2, \cdots, \vartheta_m, u, w_2) + b_{22}u_2 \\
\quad \vdots \\
y_m^{(n_m)} = p_m(\vartheta_1, \vartheta_2, \cdots, \vartheta_m, u, w_m) + b_{mm}u_m
\end{cases} \tag{3.2}$$

where y_i is the output, u_i is the input, w_i is the external disturbances of the ith loop, respectively, and $y_i^{(n_i)}$ denotes the n_i^{th} order derivative of y_i, $i = 1, 2, \cdots, m$. Note that i refers to $i = 1, 2, \cdots, m$ in the following. In (3.2), we assume that the numbers of inputs and outputs are the same; the orders n_i and the approximate values of b_{ii} are given. Define

$$f_i = p_i(\vartheta_1, \vartheta_2, \cdots, \vartheta_m, u, w_i) + (b_{ii} - b_{0,ii})u_i \tag{3.3}$$

where $b_{0,ii}$ is the approximate value of b_{ii}, and f_i represents the combined effect of internal dynamics and external disturbances in the ith loop, including the cross channel interference. Then (3.2) can be written as

$$\begin{cases}
y_1^{(n_1)} = f_1 + b_{0,11}u_1 \\
y_2^{(n_2)} = f_2 + b_{0,22}u_2 \\
\quad \vdots \\
y_m^{(n_m)} = f_m + b_{0,mm}u_m.
\end{cases} \tag{3.4}$$

The square multivariable system (3.4) is an $m-$loop system. An ADRC based SISO controller is designed for each loop independently. Consider the ith loop in (3.4)

$$y_i^{(n_i)} = f_i + b_{0,ii}u_i. \tag{3.5}$$

Let $x_{1,i} = y_i, x_{2,i} = \dot{y}_i, \cdots, x_{n_i,i} = y_i^{(n_i-1)}$ and $x_{n_i+1,i} = f_i$, which is added as an extended state. Assume f_i is differentiable and $h_i = \dot{f}_i$ is bounded. The augmented state space form of (3.5) is

$$\begin{cases} \dot{x}_i = Ax_i + Bu_i + Eh_i \\ y_i = Cx_i \end{cases} \tag{3.6}$$

where

$$A = \begin{bmatrix} 0 & 1 & 0 & \cdots & 0 \\ 0 & 0 & 1 & \cdots & 0 \\ \cdots & \cdots & \cdots & \ddots & \vdots \\ 0 & 0 & 0 & \cdots & 1 \\ 0 & 0 & 0 & \cdots & 0 \end{bmatrix}_{(n+1)\times(n+1)}, \; B = \begin{bmatrix} 0 \\ 0 \\ \vdots \\ b_{0,ii} \\ 0 \end{bmatrix}_{(n+1)\times 1}, \; E = \begin{bmatrix} 0 \\ 0 \\ \vdots \\ 0 \\ 1 \end{bmatrix}_{(n+1)\times 1},$$

$$C = \begin{bmatrix} 1 & 0 & 0 & \cdots & 0 \end{bmatrix}_{1\times(n+1)}.$$

An ESO for (3.6) is designed as

$$\begin{cases} \dot{\hat{x}}_i = A\hat{x}_i + Bu_i + L_i\left(x_{1,i} - \hat{x}_{1,i}\right) \\ \hat{y}_i = C\hat{x}_{1,i} \end{cases} \tag{3.7}$$

where $L_i = \left[l_{1,i}.l_{2,i}, \cdots, l_{n_i,i}, l_{n_i+1,i}\right]^T$ is the observer gain. In particular, let us consider a special case where the gains are chosen as

$$\left[l_{1,i}.l_{2,i}, \cdots, l_{n_i,i}, l_{n_i+1,i}\right]^T = \left[\omega_{o,i}\alpha_{1,i}, \omega_{o,i}^2\alpha_{2,i}, \cdots, \omega_{o,i}^{n_i+1}\alpha_{n_i+1,i}\right]^T \tag{3.8}$$

with $\omega_{o,i} > 0$. Here $\alpha_{j,i}, j = 1, 2, \cdots, n_i + 1$ are chosen such that $s^{n_i+1} + \alpha_{1,i}s^{n_i} + \cdots + \alpha_{n_i,i}s + \alpha_{n_i+1,i}$ is Hurwitz. For simplicity, we just let $s^{n_i+1} + \alpha_{1,i}s^{n_i} + \cdots + \alpha_{n_i,i}s + \alpha_{n_i+1,i} = \left(s+1\right)^{n_i+1}$ where $\alpha_{j,i} = \dfrac{\left(n_i+1\right)!}{j!\left(n_i+1-j\right)!}, \; j = 1, 2, \cdots, n_i + 1.$ It results in the characteristic polynomial of (3.7) to be

$$\lambda_{o,i}\left(s\right) = s^{n_i+1} + \omega_{o,i}\alpha_{1,i}s^{n_i} + \cdots + \omega_{o,i}^{n_i}\alpha_{n_i,i}s + \omega_{o,i}^{n_i+1}\alpha_{n_i+1,i} = \left(s+\omega_{o,i}\right)^{n_i+1}. \tag{3.9}$$

This makes $\omega_{o,i}$, which is the observer bandwidth of the ith loop, the only tuning parameter for the ith loop observer and the implementation process much simplified, compared to other observers.

With a well-tuned observer, the observer states will closely track the states of the augmented plant. By canceling the effect of f_i using $\hat{f}_i$, ADRC actively compensates for f_i in real time. The control law of the ith loop is designed as follows. First, the control law

$$u_i = \frac{u_{0,i} - \hat{f}_i}{b_{0,ii}} \tag{3.10}$$

approximately reduces the original plant (3.5) to

$$y_i^{(n_i)} \approx u_{0,i} \tag{3.11}$$

which is a much simple control problem to deal with. The control law is given by

$$u_i = k_{1,i}(r_i - x_{1,i}) + \cdots + k_{n_i,i}(r_i^{(n_i-1)} - x_{n_i,i}) + r_i^{(n_i)} \tag{3.12}$$

where r_i is the desired trajectory of the ith loop. Note that a feedforward mechanism is employed in (3.12) to further reduce the tracking error. The controller gains are selected so that the closed-loop characteristic polynomial $s^{n_i} + k_{n_i,i}s^{n_i-1} + \cdots + k_{1,i}$ is Hurwitz. To further reduce the tuning parameters, all the controller poles are placed at $-\omega_{c,i}$. Then the approximate closed-loop characteristic polynomial becomes

$$\lambda_{c,i}\left(s\right) = s^{n_i} + k_{n_i,i}s^{n_i-1} + \cdots + k_{1,i} = \left(s+\omega_{c,i}\right)^{n_i} \tag{3.13}$$

where $k_{j,i} = \dfrac{n_i!}{\left(j-1\right)!\left(n_i-j+1\right)!}\omega_{c,i}^{n_i-j+1}, j = 1, 2, \cdots, n_i$. This makes $\omega_{c,i}$, which is the controller bandwidth, the only tuning parameter for the ith loop controller.

In summary, the proposed DDC approach renders a new alternative for decoupling control problems. It does not need an elaborate plant model. In fact, the only information required is the orders of the subsystems associated with each input-output pair and the approximate values of the corresponding input gains b_{ii}. Being able to deal with multivariable systems that have different orders for different input-output parings is another advantage of the proposed method. Overall, the DDC is a conceptually simple and easy to understand, and above all, practical solution for real world decoupling problems, where there is a large amount of uncertainties. Therefore it is a perfect fit for hose extrusion processes.

IV. The Third Party Validation of Assemly Line Applications

The proposed method discussed above was implemented by LineStream Technologies Inc. across production lines at a Parker Hannifin hose extrusion facility in North America. Because of the production down time must be kept minimum, the implementation of the proposed method was carried out with minimum knowledge of plant dynamics. There was no modeling or simulation test done before the final deployment of the new algorithm, a typical scenario in an industrial setting. But results, once the switch is flipped and the new algorithm takes charge, were both sweeping and immediate: across ten production lines, the energy consumption drops by an average of over 50% and the process performance index (Cpk) is improved by over 30%. “The implementation was simple”, according to Scott Burrowbridge, Parker’s control engineer, “I sent them our existing PLC program over email, and a week later they showed up and installed the new program during shift changeover.” The results were unmistakable— heat zones achieved equilibrium with little to no temperature fluctuation, and the power meter readouts “look like they fell off a cliff” [27].

The extrusion lines are quite typical industrial processes where there are strong interactions among the process

variables, in this case temperatures. That is, the fluctuations of one process variable tend to propagate along the production line as the existing PID controllers, designed without any considerations for such interactions, almost always have a difficult time dealing with them. The end result is usually observed in the form of continuously overshooting and undershooting in the target temperatures, also known as cycling in practice.

DDC, on the other hand, actively estimate and reject such interactions, BEFORE they result in temperature fluctuation, as evident in the Parker plant: we run the production lines for 24 hours with the PIDs in each loop, and then switched control algorithm from PID to a DDC. We observed that after 15 minutes, temperature fluctuations stopped, overshoot disappeared, cooling fans were turned off automatically, and the energy consumption is reduced by over 50%, as shown in Fig. 5-12, with the energy savings of Production Lines 1-8.

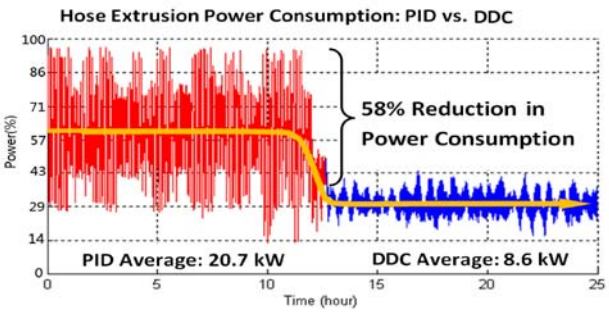

Fig. 5 Energy savings in a hose extruder Production Line 1.

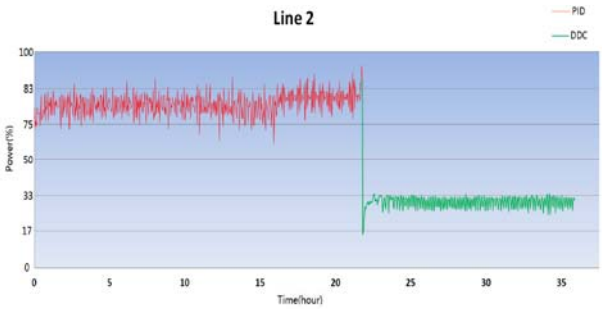

Fig. 6 Energy savings in a hose extruder Production Line 2.

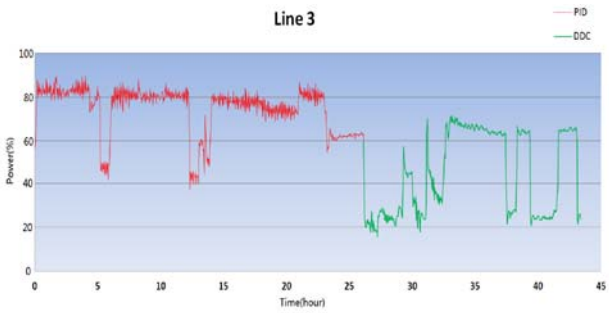

Fig. 7 Energy savings in a hose extruder Production Line 3.

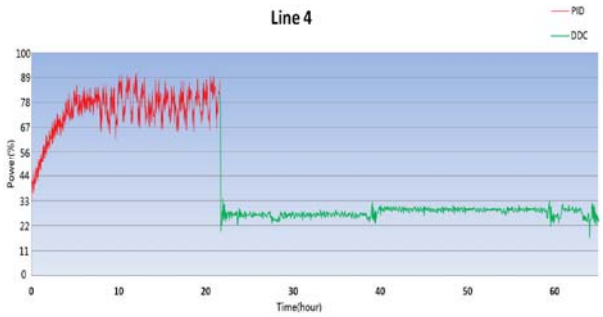

Fig. 8 Energy savings in a hose extruder Production Line 4.

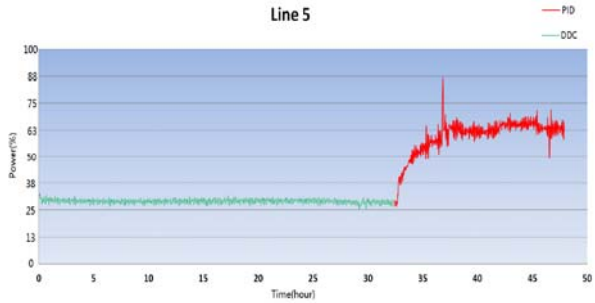

Fig. 9 Energy savings in a hose extruder Production Line 5.

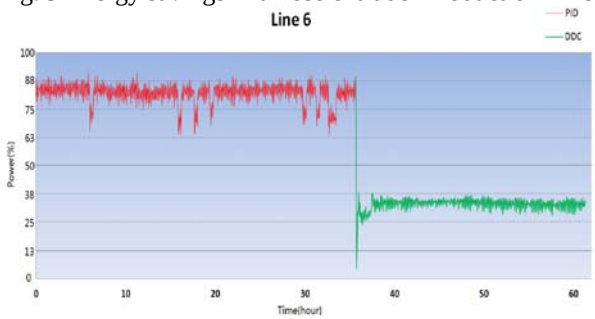

Fig. 10 Energy savings in a hose extruder Production Line 6.

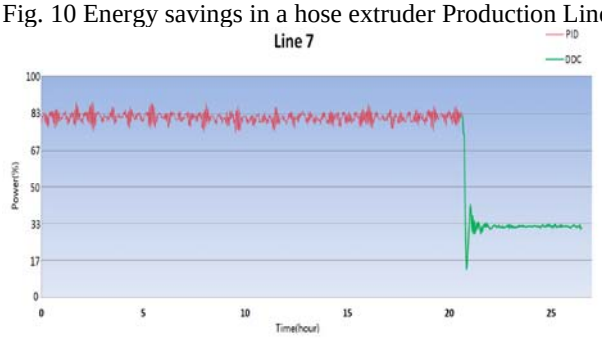

Fig. 11 Energy savings in a hose extruder Production Line 7.

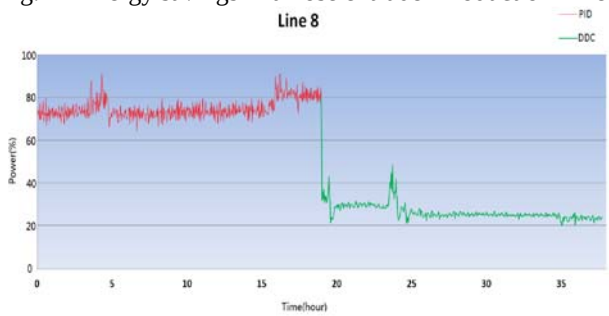

Fig. 12 Energy savings in a hose extruder Production Line 8.

From the above figures, it can be observed that the DDC approach results in over 50% energy reduction in all the production lines. Note that testing DDC is quite simple. To eliminate potential switching risks, LineStream engineers installed the DDC software in parallel with the existing logic. This allows manufacturers to switch between DDC and the existing control program for comparative performance testing. This also gives manufacturers the peace of mind—they can always return to exactly how things were originally [27].

V. Concluding Remarks

In this paper, a novel disturbance decoupling control method is presented for hose extrusion processes. It is based on the novel active disturbance rejection concept. The proposed DDC method is a good fit for hose extrusion processes due to the following reasons: 1) it does not require an accurate mathematical model, which is very challenging to obtain for industrial processes such as extrusion lines because of the highly nonlinear characteristics and production restrictions; 2) it can readily decouple the multi-input and multi-output processes by taking the interactions among different parts of the process as disturbances, to be estimated and cancelled; 3) it has strong disturbance rejection ability and robustness to uncertainties, which widely exist in extrusion processes. The production line data show the huge energy savings and demonstrate the DDC approach as a transformative control technology in extrusion processes.

Acknowledgments: The authors would like to thank LineStream Technologies Inc. for generously providing us with the production line data.

References

[1] A. K. Kochhar and J. Parnaby, "Dynamic modelling and control of plastics extrusion processes," *Automatica*, vol. 13, pp. 177-183, 1977.

[2] M. H. Costin, P. A. Taylor, and J. D. Wright, "A critical review of dynamic modeling and control of plasticating extruders," *Polymer Engineering and Science*, pp. 393-401, 1982.

[3] B. Yang and L. J. Lee, "Process control of polymer extrusion. Part I: feedback control," *Polymer Engineering and Science*, vol. 26, no. 3, pp. 197-204, 1986.

[4] M. Rides, "Effect of pressure-volume-temperature behavior of polymer melts on extrudate swell measurements," *NPL Report CMMT(A)*, vol. 13, pp 1-3, 1996.

[5] T. O. Broadhead, W. I. Patterson, and J. M. Dealy, "Closed loop viscosity control of reactve extrusion with an in-line rheometer," *Polymer Engineering and Science*, vol. 36, no. 23, pp. 2840–2851, 1996.

[6] P. E. Wellstead, W. P. Health, and A. P. Kjaer, "Identification and control of web processes: polymer film extrusion," *Control Engineering Practice*, vol. 6, pp. 321–331, 1998.

[7] S. Chin and S. Pong, "In-Line Viscosity Control in an Extrusion Process with a Fuzzy Gain Scheduled PID Controller," *Journal of Applied Polymer Science*, vol. 74, pp. 541–555, 1999.

[8] S.-H. Chiu, and S.-H. Pong, "In-line viscosity fuzzy control," *Journal of Applied Polymer Science*, vol. 79, no. 7, pp. 1249–1255, 2000.

[9] L. Tan, A. Lotfi, E. Lai, J. B. Hull, "Soft computing applications in dynamic model identification of polymer extrusion process," *Applied Soft Computing*, vol. 4, pp. 345–355, 2004.

[10] F. Previdi, S. M. Savaresi, A. Panarotto, "Design of a feedback control system for real-time control of flow in a single-screw extruder," *Control Engineering Practice*, vol. 14, pp. 1111–1121, 2006.

[11] M. McAfee and S. Thompson, "A novel approach to dynamic modelling of polymer extrusion for improved process control," *Proceedings of the Institution of Mechanical Engineers, Part I, Journal of Systems and Control Engineering*, vol. 221, no. 1, pp. 617-628, 2007.

[12] M. McAfee, "Enhancing process insight in polymer extrusion by grey box modelling," *Transactions of the Institute of Measurement and Control*, vol. 29, no. 5, pp. 467–488, 2007.

[13] W. Yang, Y. Yang, H. Zong, "Temperature distribution measurement and control of extrusion process by tomography," *IEEE International Workshop on Imaging Systems and Techniques*, pp 170-174, 2008.

[14] C. Jun, Z. Dongzhi, Y. Yanjuan, "Model prediction and numerical simulation of melt temperature distribution in process of polymer extrusion," *IEEE International Conference on Intelligent Computing and Intelligent Systems*, vol 2, pp. 808-812, 2009.

[15] X. Liu, K. Li, M. McAfee, and J. Deng, "Soft-sensor for real-time monitoring of melt viscosity in polymer extruson process," *Proceedings of the 40th IEEE Conference on Decision and Control*, pp. 3469-3474, 2010.

[16] P. A. Balakrishnan and S. Ravi, "Design of intelligent self tuning ANFIS temperature controller for plastic extrusion process," IEEE *International Conference on Communication Control and Computing Technologies*, pp 314-320, 2010.

[17] M. Del Pilar Noriega E. and C. Rauwendaal, "Troubleshooting the extrusion process: a systematic appraoch to solving plastic extrusion problems," Hanser, Munich, 2001.

[18] http://en.wikipedia.org/wiki/Extrusion.

[19] Q. Zheng, Z. Chen, and Z. Gao, "A Practical Approach to Disturbance Decoupling Control," *Control Engineering Practice*, vol. 17, no. 9, pp. 1016-1025, 2009.

[20] J. Han, "Auto-disturbance rejection control and its applications," *Control and Decision*, vol.13, no.1, 1998 (In Chinese).

[21] J. Han, "Nonlinear Design Methods for Control Systems," *Proceedings of the 14th IFAC World Congress*, 1999.

[22] Z. Gao, Y. Huang, and J. Han, "An Alternative Paradigm for Control System Design," *Proceedings of the 40th IEEE Conference on Decision and Control*, pp. 4578-4585, 2001.

[23] Z. Gao, "Scaling and Parameterization Based Controller Tuning," *Proceedings of the American Control Conference*, pp. 4989-4996, 2003.

[24] Z. Gao, "Active disturbance rejection control: a paradigm shift in feedback control system design," *Proceedings of the American Control Conference*, pp. 2399-2405, 2006.

[25] J. Han, "From PID to Active Disturbance Rejection Control," *IEEE Transactions on Industrial electronics*, vol 56, no. 3, pp 900-906, 2009.

[26] Y. Huang, K. Xu, J. Han, and J. Lam, "Flight Control Design Using Extended State Observer and Non- Smooth Feedback," *Proceedings of the 40th IEEE Conference on Decision and Control*, pp. 223-228, 2001.

[27] "LineStream Technologies: Advanced Control, Made Simple ," *Ohio Polymer*, http://polymerohio.org.

View publication stats